SH100 C013U

Counterbalance Monitor Arm

Fits most 17"-32"flat & curved Monitors

Performance
Gas Spring
Aluminum
Monitor Arms

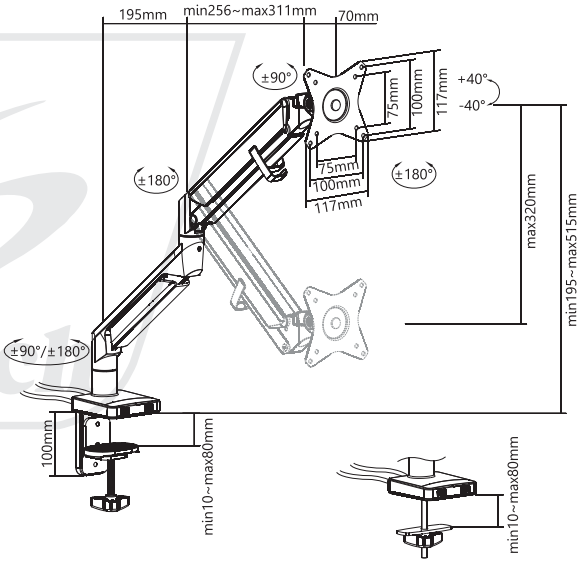

Screen Size	VESA Compatible	Weight Capacity	Tilt Range	Swivel Range	Screen Rotation	USB Port	Cable Management	Curved Monitor
17"-32"	**75x75 100x100**	**1-9kg/2.2-19.8lbs**	**+40° ~ -40°**	**+90° ~ -90°**	**+180° ~ -180°**			

Quick-Release VESA Plate
allows for effortless monitor installation and removal.

Built-in Spring Gauge
adjusted to fit various monitor weights.

Built-in 180 Degree Rotation Stop
prevents interference with the wall or partitions.

High Grade Silicone Padding
prevents movement while protecting the desktop from scratches.